OCTAQUICK.
A BUILD-IT-YOURSELF PORTABLE EXHIBITION STAND.

exhibition systems
presentation systems

THE WORLD OF SYSTEMS

OCTANORM®

.OCTAQUICK.
EXHIBITING HAS NEVER
BEEN EASIER OR MORE
COST-EFFECTIVE...

Participating in exhibitions requires an investment of both time and money. Our new OCTAquick has been purpose-designed to help you achieve maximum benefit with minimum commitment to the time and cost required to build and dismantle stands. OCTAquick is a new portable exhibition stand system that fits into the back of an estate car and can be assembled in minutes by unskilled personnel. The system comprises four basic modules for the construction of displays that range from a simple panel wall to a medium sized exhibition stand, each set of components being complete with three spotlights and a power cable. With OCTAquick's high quality components and stylish design, your self-build stand has a truly professional appearance to help you achieve optimum impact and effectiveness. And you have complete control over construction and dismantling.

OCTAQUICK “3X3”. THE MODULE FOR MAXIMUM IMPACT.

Example types: Q 40, Q 41

Sturdy transport case

Easy and precise assembly

Trusted OCTANORM tension lock joint

A full 9 square metres of exhibition space constructed in minutes from components trans-ported in 2 carry cases in the back of your estate car – that´s the OCTAquick »3x3« module. Beams and poles fit together quickly and simply - the secret is the OCTANORM joint with its easy to use tension lock. Print your graphics onto fabric banners that are suspended from the beams by means of clips. Alternatively, use solid infill panels, which can also be fitted into the beams. Components, including three 150-watt spotlights and a power cable, are positioned in the carry case, whilst the case itself has castors for ease of transportation. Accessories include counters, display cases and literature racks (see pages 14-15) to help you get the most from your stand space.

Suspending the fabric panel

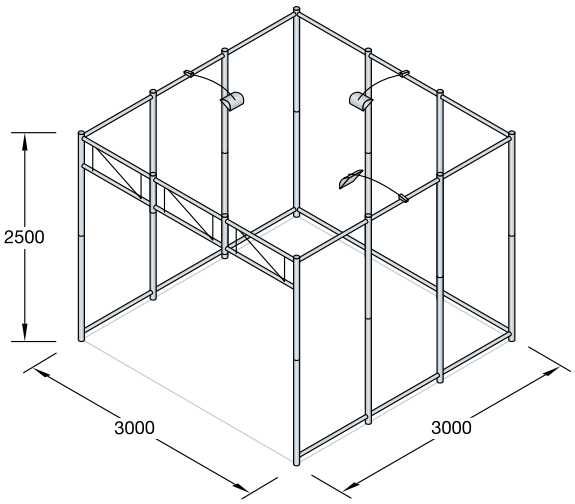

Q 40
Construction set
including 2 transport cases Q 501, Q 502 and lighting
weight: 176.37 lb/80.0 kg

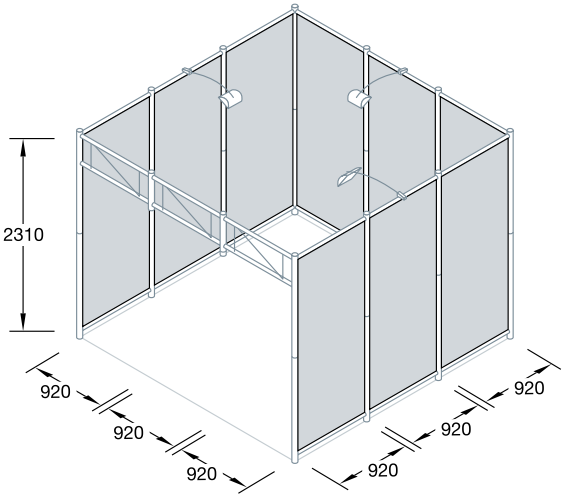

Q 41
Wall infill panel set “fabric”, white,
with inserted mounting profile
weight: 23.35 lb/11.5 kg

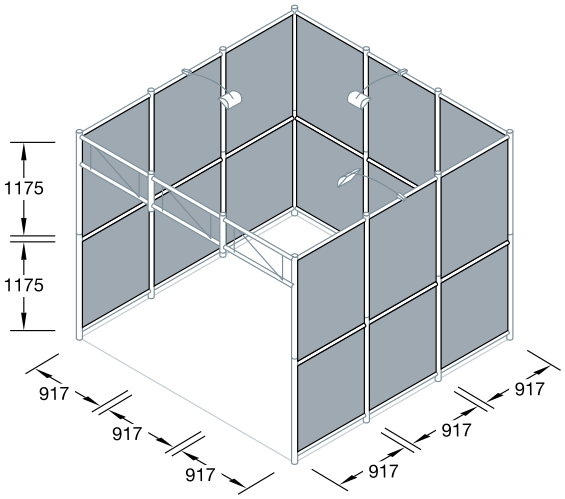

Q 42
Wall infill panel set, white, 3.2 mm,
including 9 beams and transport case Q 503
weight: 178.57 lb/81.0 kg

OCTAQUICK “3X2”. COMBINING IMPACT AND ECONOMY.

Example types: Q 30, Q 32

Q 370 spotlight

Shelf set Q 80

Wall infill panels

Where space is less readily available, the OCTAquick »3x2« module enables impact to be combined with economy. It uses the same high quality components – beams, poles and infill panels – to create 6 square metres of useable exhibition space. Again graphics can be printed onto fabric banners and suspended from beams. If solid infill panels are used, shelves can be fitted as optional extras to create more display area. The basic metalwork together with three 150-watt spotlights are housed in two robust carry cases fitted with castors for ease of handling. The system is very stable when erected and does not depend on infill panels for its structural integrity. Accessories include counters, display cases and literature racks (see pages 14-15) to help you get the most from your stand space.

Height-adjustable foot

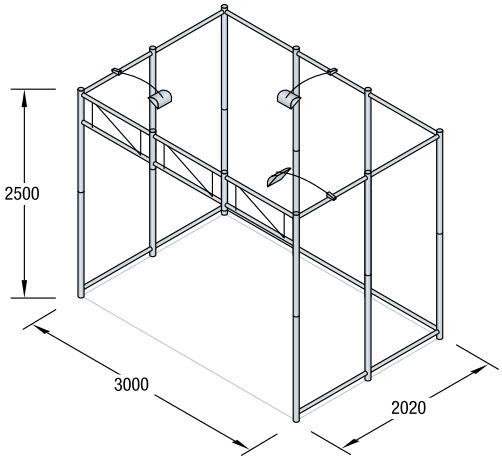

Q 30
Construction set
including transport case Q 502 and lighting
weight: 147.71 lb/67.0 kg

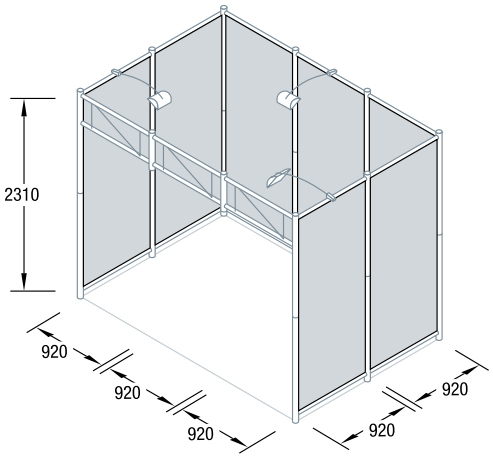

Q 31
Wall infill panel set “fabric”, white,
with inserted mounting profile
weight: 19.84 lb/9.0 kg

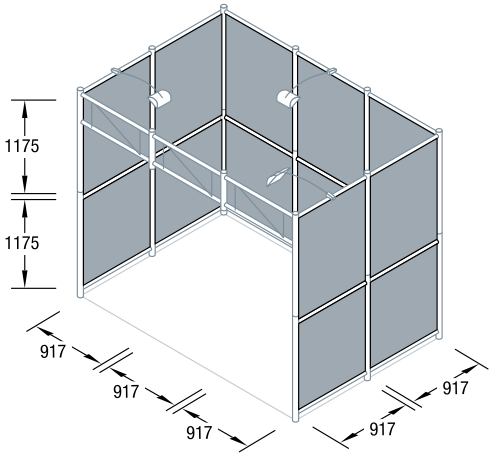

Q 32
Wall infill panel set, white, 3.2 mm,
including 7 beams and wooden case
weight: 119.05 lb/54.0 kg

OCTAQUICK “3X1”. EFFECTIVE DISPLAY IN A COMPACT AREA.

Example types: Q 20, Q 21

Suspension of wire rope poster frame set Q 90

Panel fixing Q 91

Truss beam design

Where exhibition space is at a premium, the OCTAquick »3x1« module enables effective displays to be mounted in the most compact area. The assembled components create 3 square metres of useable exhibition space. For companies operating on a divisional basis or where topical information needs to be frequently updated, printed fabric banners can be used to form a constant background with framed graphic panels employed to present current information. All metalwork components, including three 150-watt spotlights, are housed in two carry cases ready for quick and easy erection. Accessories include counters, display cases and literature racks (see pages 14-15) to help you get the most from your stand space.

Easy cable routing

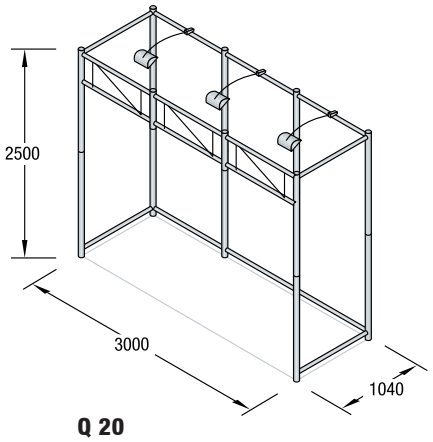

Q 20
Construction set
including transport case Q 502 and lighting
weight: 120.15 lb/54.5 kg

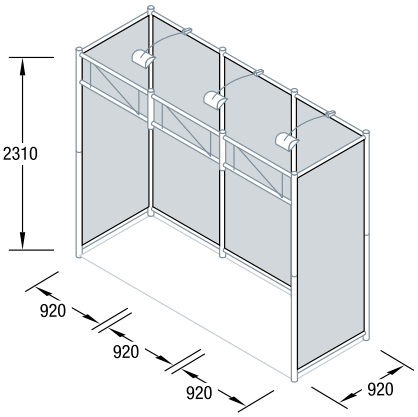

Q 21
Wall infill panel set “fabric”, white,
with inserted mounting profile
weight: 11.24 lb/5.1 kg

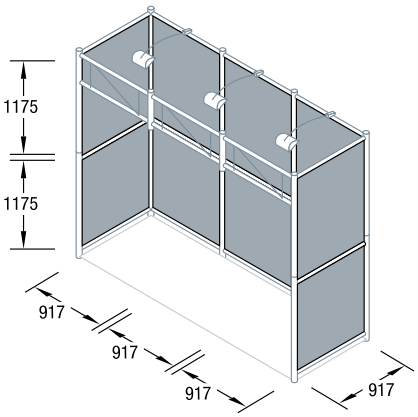

Q 22
Wall infill panel set, white, 3.2 mm,
including 5 beams and wooden case
weight: 85.98 lb/39.0 kg

.OCTAQUICK “WALL”. PANEL DISPLAY “STARTER-PACK”.

Example types: Q 10, Q 12

Stylish round profiles

wall set Q 305

Separately installable lighting

OCTAquick' Q10 module is a panel display system with the potential to become an exhibition stand. Using OCTAquick beams and poles it provides 3 linear metres of panel display area and is supplied complete with three 150-watt spotlights and a power cable. Infill panels can be fabric or solid with graphics applied as required. Q10 modules can be used individually or in combination, or integrated with other OCTAquick modules to form exhibition stands. Accessories include a panel-mounted literature holder and a free-standing literature rack (see pages 14-15).

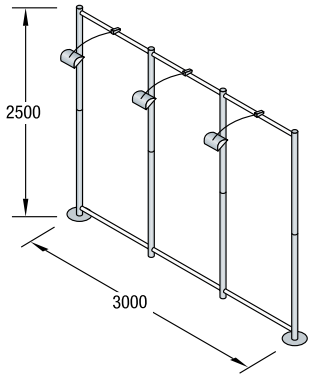

Q 10
Construction set
including cardboard box and lighting
weight: 70.55 lb/32.0 kg

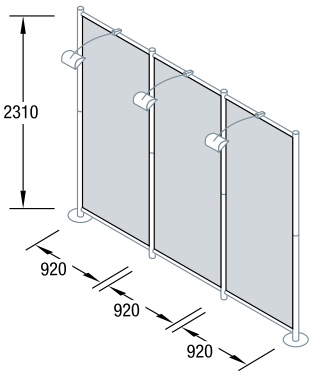

Q 11
Wall infill panel set "fabric", white,
with inserted mounting profile
weight: 8.38 lb/3.8 kg

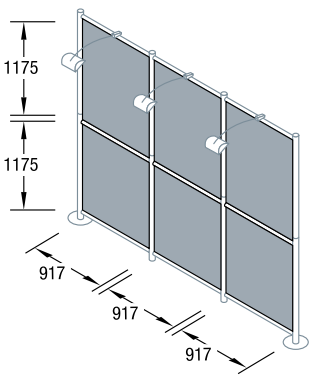

Q 12
Wall infill panel set, white, 3.2 mm,
including 3 beams and wooden case
weight: 52.91 lb/24.0 kg

.OCTAQUICK “1X3”.
THE EXTENSION MODULE.

STAND SIZE „4 x 3“*

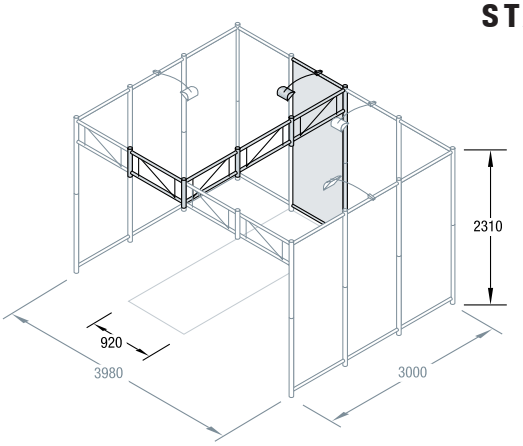

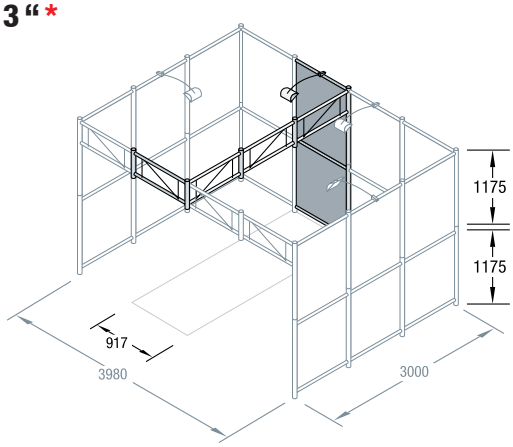

Q 40+Q 41	**(already available)**
Q 50	1x3 Extension set incl. transport case Q 502 and lighting weight: 55,12 lb/25.0 kg
Q 51	Wall infill panel set “fabric”, white, with inserted mounting profile weight: 2.87 lb/1.3 kg

Q 40+Q 42	**(already available)**
Q 50	1x3 Extension set incl. transport case Q 502 and lighting weight: 121.25 lb/25.0 kg
Q 52	Wall infill panel set, white, 3.2 mm incl. 1 beam and wooden case weight: 17.64 lb/8.0 kg

STAND SIZE „5 x 3“*

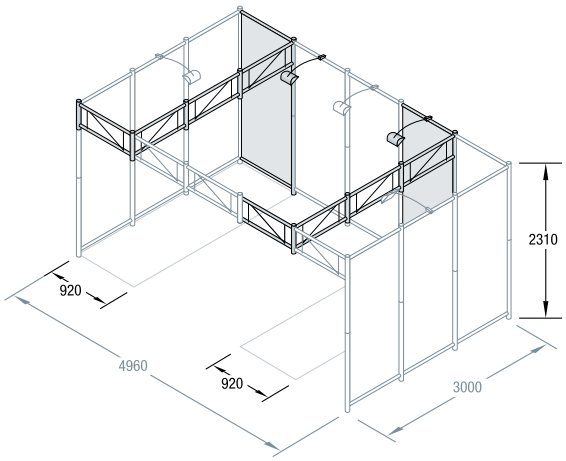

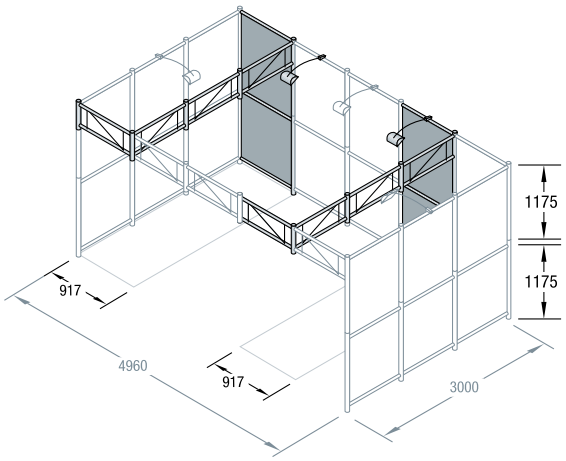

Q 40+Q 41	**(already available)**
2x Q 50	1x3 Extension set incl. transport case Q 502 and lighting weight: 110.23 lb/50.0 kg
2 x Q 51	Wall infill panel set “fabric”, white, with inserted mounting profile weight: 5.73 lb/2.6 kg

Q 40+Q 41	**(already available)**
2 x Q 50	1x3 Extension set incl. transport case Q 502 and lighting weight:110.23 lb/50.0 kg
2 x Q 52	Wall infill panel set, white, 3.2 mm incl. 1 beam and a wooden case weight: 35.27 lb/16.0 kg

Basic OCTAquick exhibition stand modules can be expanded simply and easily with a purpose designed extension module illustrated above. The extension module is supplied in its own carry case complete with a 150-watt spot-light and power cable. The OCTAquick acces-sories range has been carefully formulated to provide optional extras that will help to maximise the use of exhibition space. The result is a range of unique self-build modules and accessories for the effective presentation of a company, its products and services. Exhibiting has never been so easy or cost-effective.

*Naturally your creativity is required here: we will be glad to advise you on all stand varieties.

WALL INFILL PANEL „FABRIC“

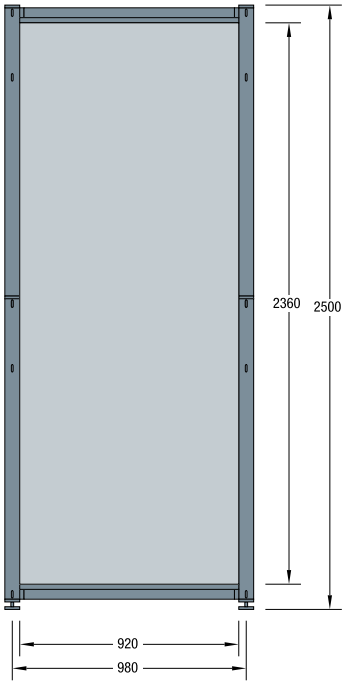

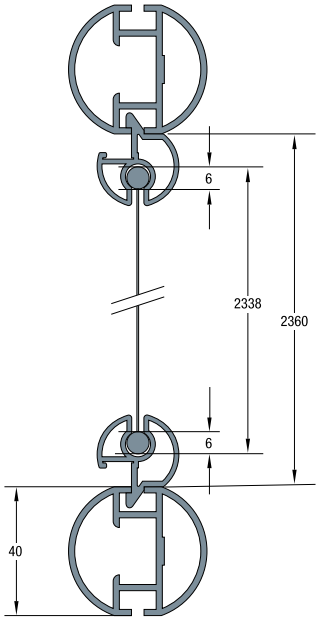

vertical section

Please ask for our technical information about OCTAquick filling dimensions.

WALL INFILL PANEL, 3.2 MM

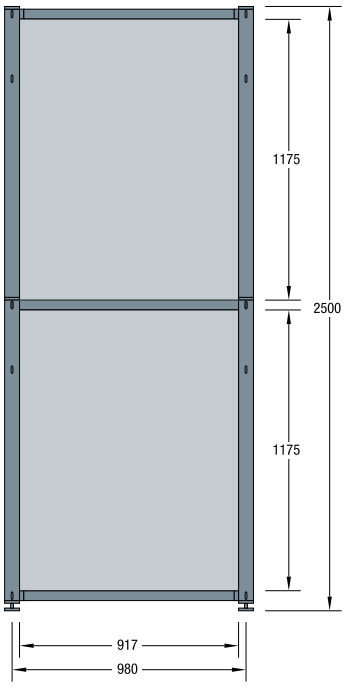

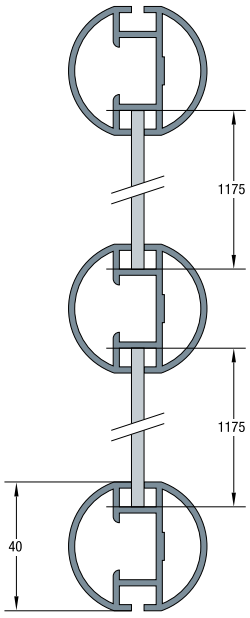

vertical section

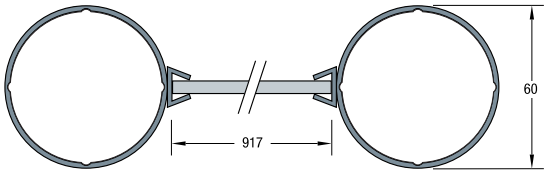

horizontal section

STANDARD ACCESSORIES

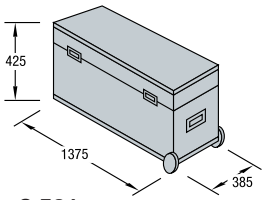

Q 501
Transport case
for beams and accessories
incl. in the corresponding sets
weight: 27.34 lb/12.4 kg

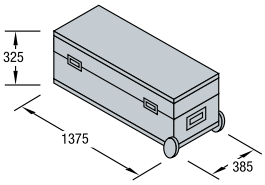

Q 502
Transport case
for uprights and accessories
incl. in the corresponding sets
weight: 23.15 lb/10.5 kg

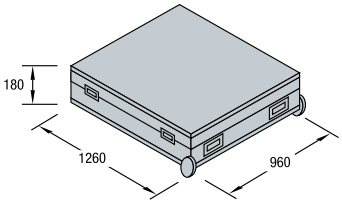

Q 503
Transport case
for 3.2 mm wall panels
and accessories incl. wall
infill panel set Q 42
weight: 33.51 lb/15.2 kg

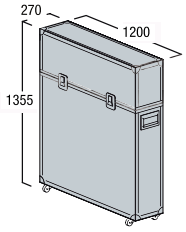

Q 504
Transport case
with carry handle and castors,
plastic / aluminium
weight: 48.50 lb/22 kg

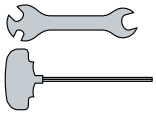

Q 99
Assembly tool set
incl. in all construction sets
weight: 0.55 lb/0.25 kg

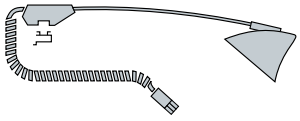

Q 370
Spotlight
150 W/230 V
incl. in all construction sets
weight: 1.98 lb/0.9 kg

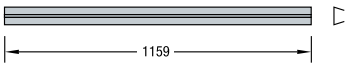

Q 316
Protecting profile for
3.2 mm thick panels
incl. in wall infill panel sets
weight: 0.44 lb/0.2 kg

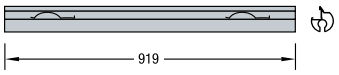

Q 326
Inserted mounting profile
for fabric infill panels
incl. in wall infill panel sets “fabric”
weight: 0.88 lb/0.4 kg

OPTIONAL EXTRAS

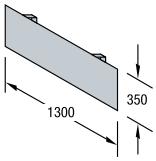

Q 70
Fascia set
wood, 10 mm,
white,weight:
4.41 lb/2.0 kg

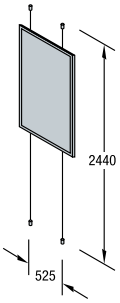

Q 90
Poster frame set
Placard size:
DIN A1, weight:
11.24 lb/5.1 kg

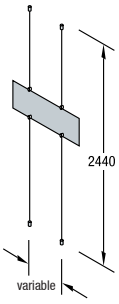

Q 91
Panel fixing set
weight: 1.10 lb/
0.5 kg

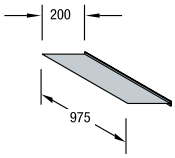

Q 80
shelf set
weight:
5.51 lb/2.5 kg

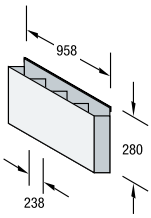

Q 81
Literature holder set
weight: 16.53 lb/7.5 kg

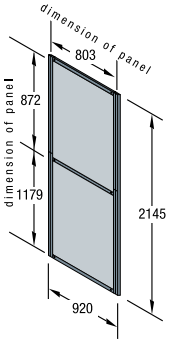

Q 321
Turning door, DIN
left aluminium/
wood infill, white,
4 mm, lockable,
unmounted set

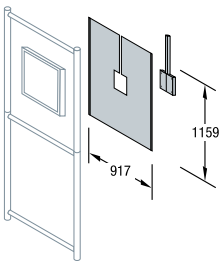

Q 305
Wall set for monitor,
wood, white, 3.2 mm
with beams and adaptor
(without screen)

ACCESSORIES

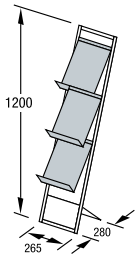

P-3
Literature rack
3 DIN A4-shelves
weight: 13.23 lb/6.0 k

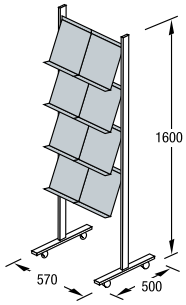

P-8
Literature rack
8 DIN A4-shelves
weight: 35.27 lb/16.0 kg

BASIC MODULES

Example type: Q 400.31

Example type: Q 401.31/LED

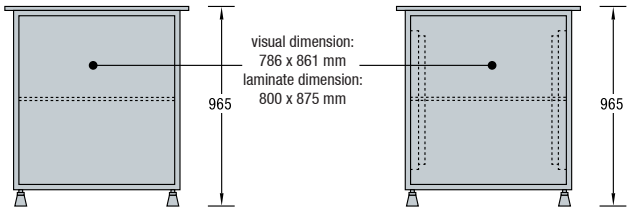

Q 400.31
Basic set, silver-grey RAL 9006
weight: 56.44 lb/25.6 kg

Q 401.31/LED
Basic set, illuminated,
acrylic front, 60 W / 24 V
weight: 67.24 lb/30.5 kg

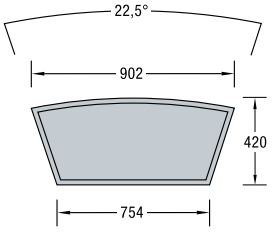

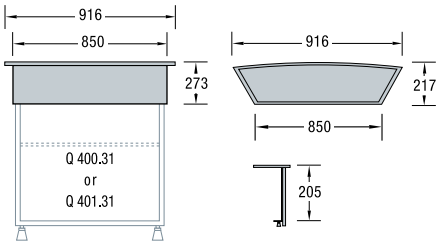

Q 400.31
Basic set, silver-grey RAL 9006
weight: 56.44 lb/25.6 kg

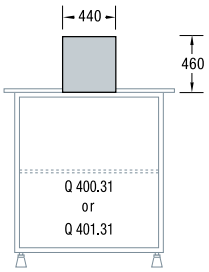

Q 430.01
Counter top screen
perforated aluminium
panel, weight: 3.31lb/
1.50 kg

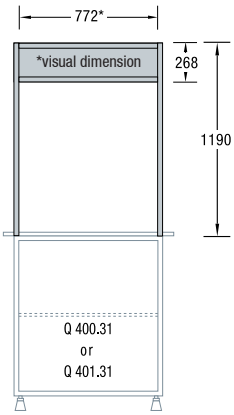

Q 440.90
Fascia extension
aluminium with
straight panel, grey
weight: 9.04 lb/4.10 kg

ACCESSORIES

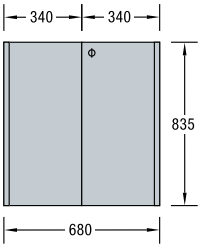

Q 411.31
Door set,
silver-grey RAL 9006
weight: 14.33 lb/6.5 kg

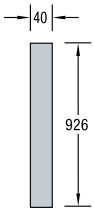

Q 412.31
Connection set,
silver-grey RAL 9006
weight: 1.10 lb/0.5 kg

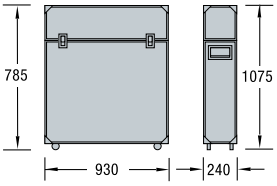

Q 510
Transport case
for 1 basic module
including accessories
weight: 44.75 lb/20.3 kg

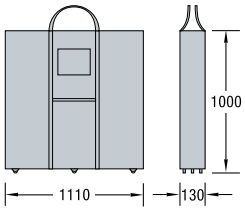

Q 511
Transport bag
grey, with castors for
1 basic module and
door set

TECHNICAL INFORMATION

ADDITIONAL INFORMATION

Extrusions:	Aluminium, matt clear anodized, silver
Counter top:	Wood, 16 mm
Side panels:	Wood, 16 mm
Drawer base:	Wood, 16 mm (below and centre)
Front panel:	Wood, 3.2 mm
Feet:	Height adjustable (approx. 10 mm)
Door set:	2 wooden double doors tool-free assembly, lockable, 2 keys

Special designs (like shapes, sizes and surfaces) on request

EXTENSION MODULES

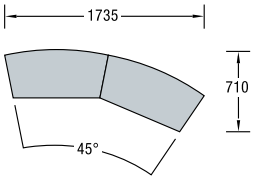

2 x basis sets
1 x connection set

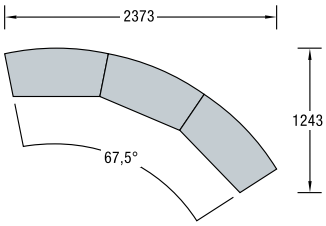

3 x basis sets
3 x connection sets

OCTAQUICK.
THE EXHIBITION STAND THAT IS ALWAYS FIRST ON ITS FEET.

exhibtion systems
interior design systems
presentation systems
cleanroom systems
software and service

OCTAQUICK:
TECHNICALLY SUPERIOR, AESTHETICALLY OUTSTANDING, EASY AND QUICK TO USE.

AW 1600.GB_OCTAquick_06/2012

THE WORLD OF SYSTEMS

OCTANORM®